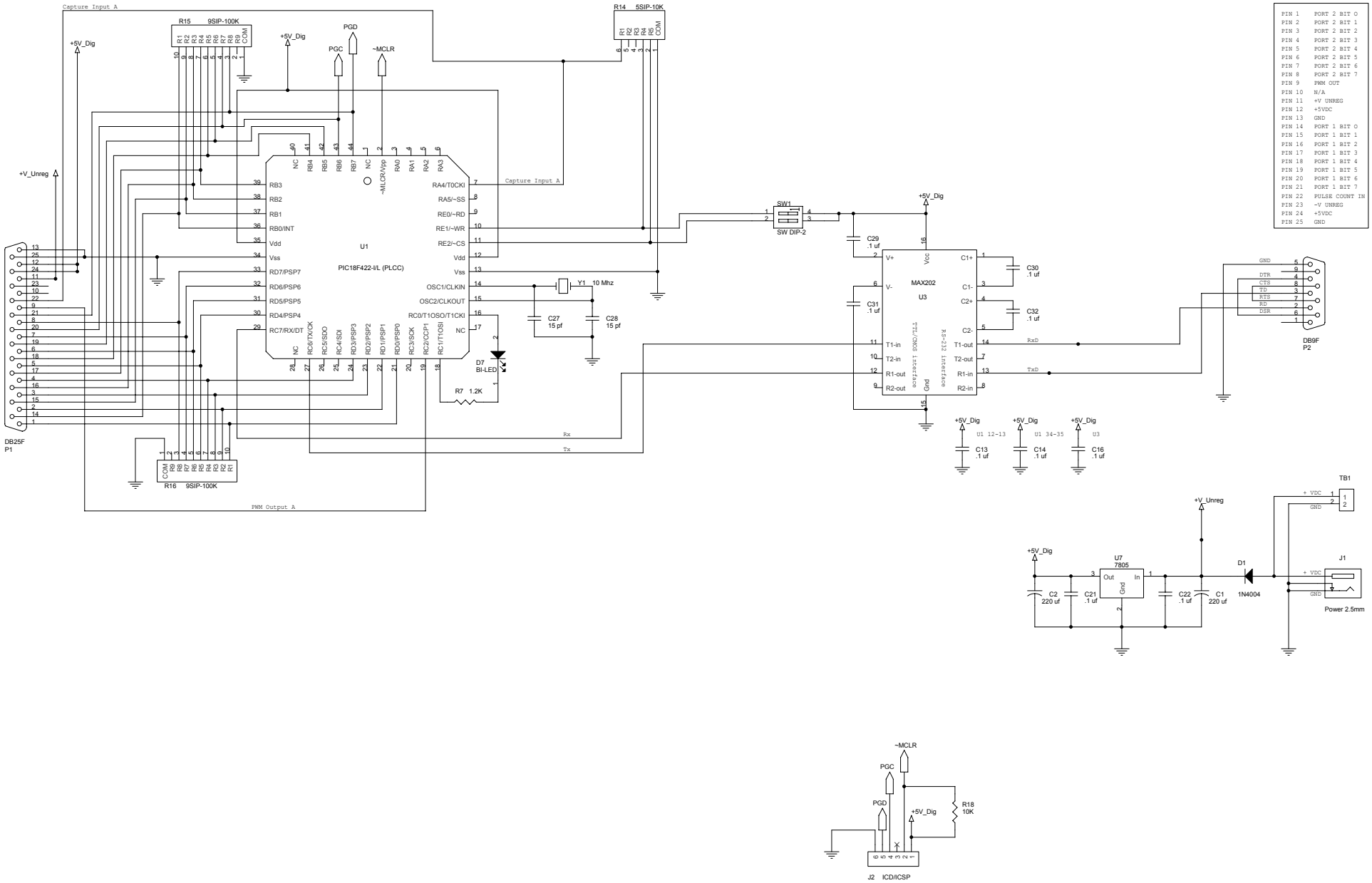

PIN 1	PORT 2 BIT O
PIN 2	PORT 2 BIT 1
PIN 3	PORT 2 BIT 2
PIN 4	PORT 2 BIT 3
PIN 5	PORT 2 BIT 4
PIN 6	PORT 2 BIT 5
PIN 7	PORT 2 BIT 6
PIN 8	PORT 2 BIT 7
PIN 9	PWM OUT
PIN 10	N/A
PIN 11	+V UNREG
PIN 12	+5VDC
PIN 13	GND
PIN 14	PORT 1 BIT O
PIN 15	PORT 1 BIT 1
PIN 16	PORT 1 BIT 2
PIN 17	PORT 1 BIT 3
PIN 18	PORT 1 BIT 4
PIN 19	PORT 1 BIT 5
PIN 20	PORT 1 BIT 6
PIN 21	PORT 1 BIT 7
PIN 22	PULSE COUNT IN
PIN 23	-V UNREG
PIN 24	+5VDC
PIN 25	GND

Integrity Instruments
2642 20th Ave S.W.
Pine River, MN 56474
www.intigrityusa.com

Title: 232M300 COUNTER SCHEMATIC

Size: C | Document Number: <Doc> | Rev:

Date: Wednesday, April 27, 2005 | Sheet 1 of 1